Railenergy

# 4th Railenergy Workshop

## Potentials and limitations of waste heat usage in Rolling stock

March 18th, 2009
Berlin

***Bombardier Transportation***

Christian Lauszat

Railenergy

# Motivation

- Waste heat usage for heating in DMUs is state of the art, but not for cooling
- Up to 10% of traction power is used for cooling of DMUs
- Waste heat power exceeds traction power
- Potentials of waste heat usage:
  - Improve the energy efficiency of a DMU
  - Decrease of engine-power requirements (less auxiliary power needed)
  - Increase of the range of coverage

Conventional compression refrigeration cycles

- energy efficient, but electrical / mechanical energy for the compressor needed
- high operating costs, which can only be reduced by new intelligent solutions

Railenergy

# Objectives

- Data collection and evaluation of
  - the technical equipment of air conditioned trains ✓
  - relevant standards and climate data ✓
- Evaluation and assessment of the
  - potential heat sources of a DMU ✓
  - most promising combination of heat source and waste heat technology ✓
- Definition of functional requirements for prototype installation
- Feasibility report on energy saving prospects and potential operating costs on train level

# Requirements

Definition of the climate zones according to EN Standards EN 13129-1, EN 14813-1, EN 14750-1

Summer

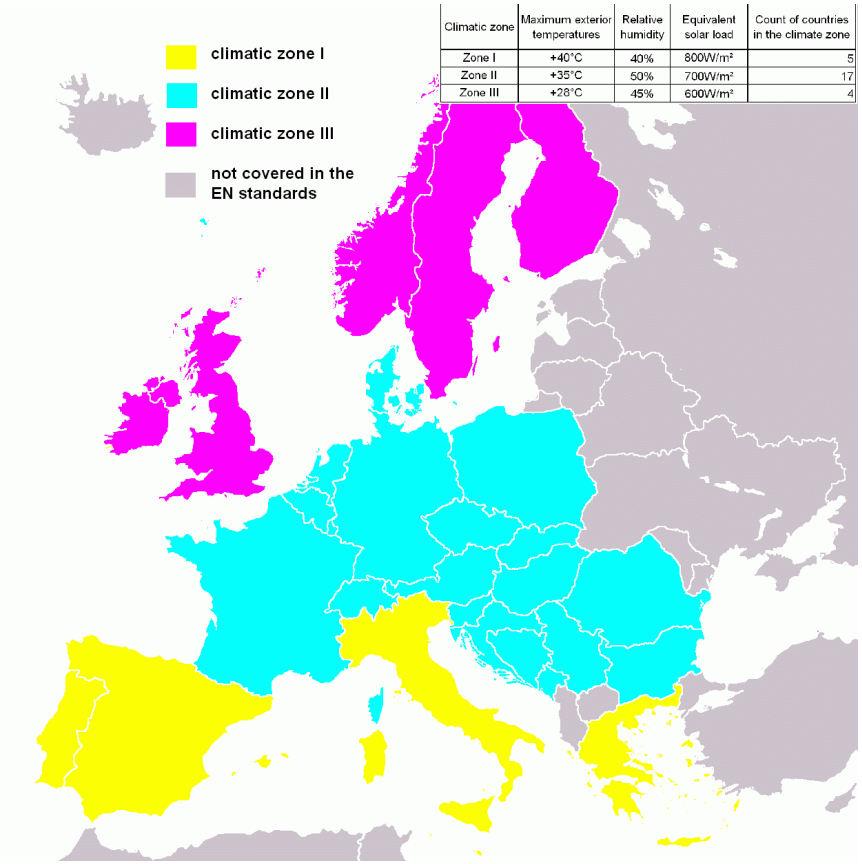


| Climatic zone | Maximum exterior temperatures | Relative humidity | Equivalent solar load | Count of countries in the climate zone |
|---|---|---|---|---|
| Zone I | +40°C | 40% | 800W/m² | 5 |
| Zone II | +35°C | 50% | 700W/m² | 17 |
| Zone III | +28°C | 45% | 600W/m² | 4 |

Winter

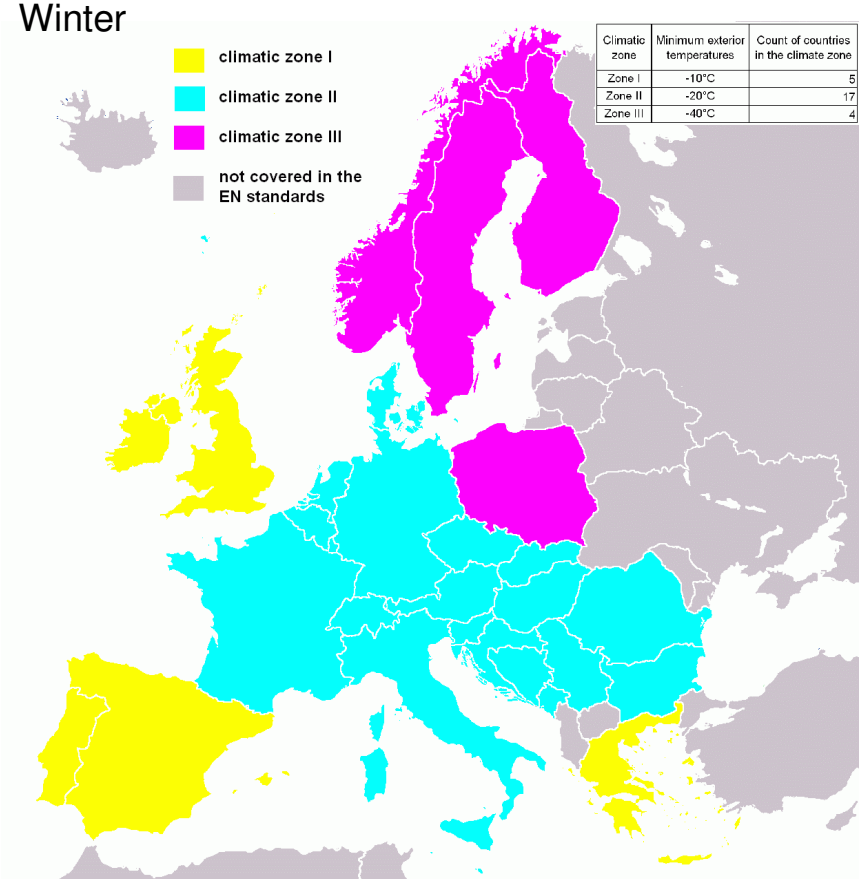


| Climatic zone | Minimum exterior temperatures | Count of countries in the climate zone |
|---|---|---|
| Zone I | -10°C | 5 |
| Zone II | -20°C | 17 |
| Zone III | -40°C | 4 |

Most of the countries are classified in the climate zone II.

Railenergy

# Analysis of air conditioned trains

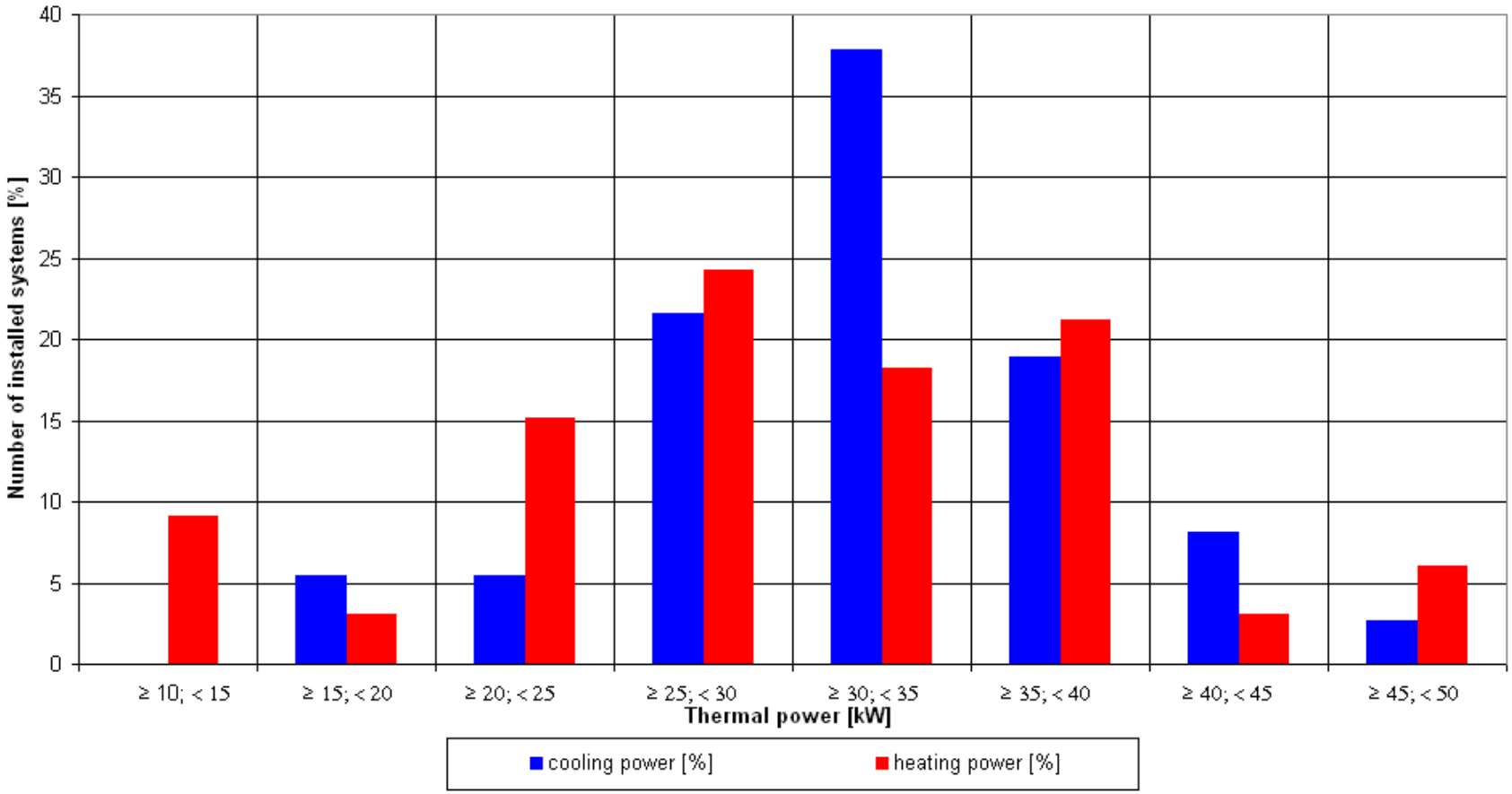


Focus on alternative technologies which are designed for a

- **heating power of 30…40kW** **16…24kVA demand on energy for cooling**
- **cooling power of 30…35kW** **30…35kVA demand on energy**

# Energy balance of a diesel engine

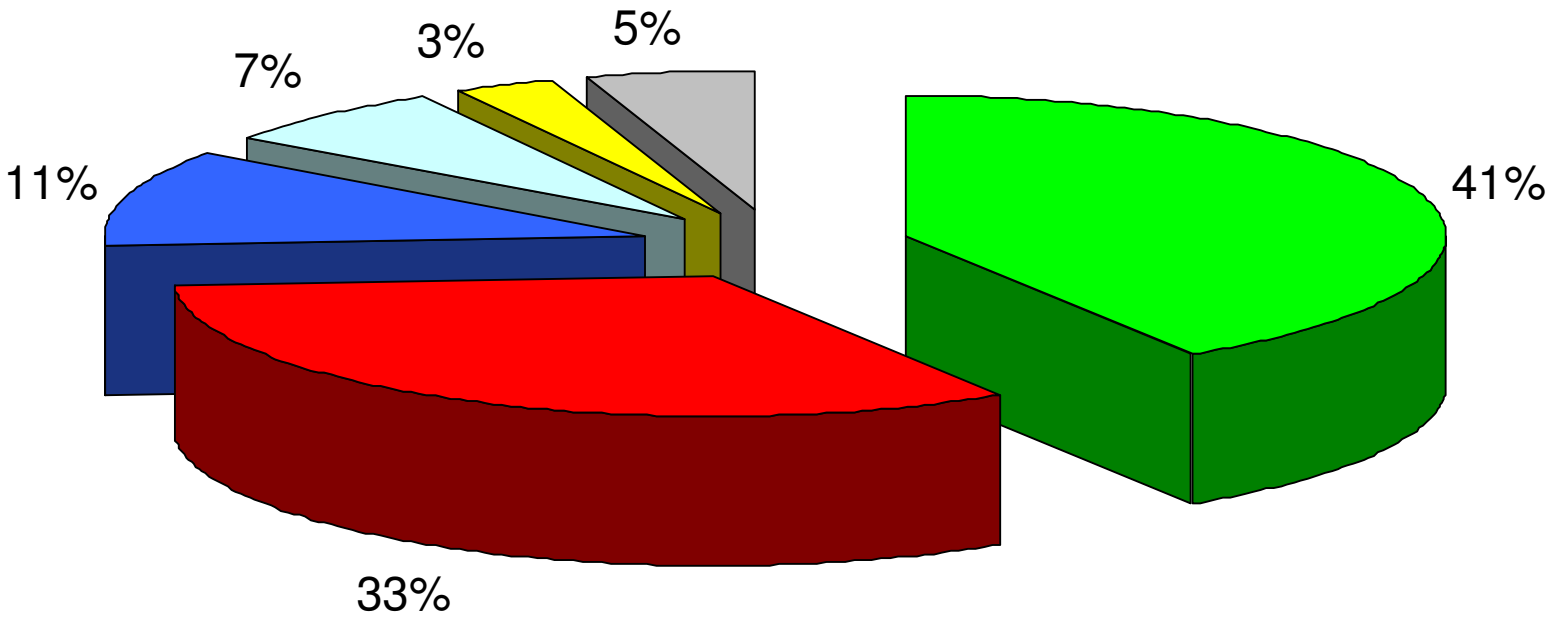


- motor power
- heat losses of exhaust air
- heat losses of high temperature circuit
- heat losses of low temperature circuit
- natural convection
- internal friction

# Evaluation of the available waste heat flux

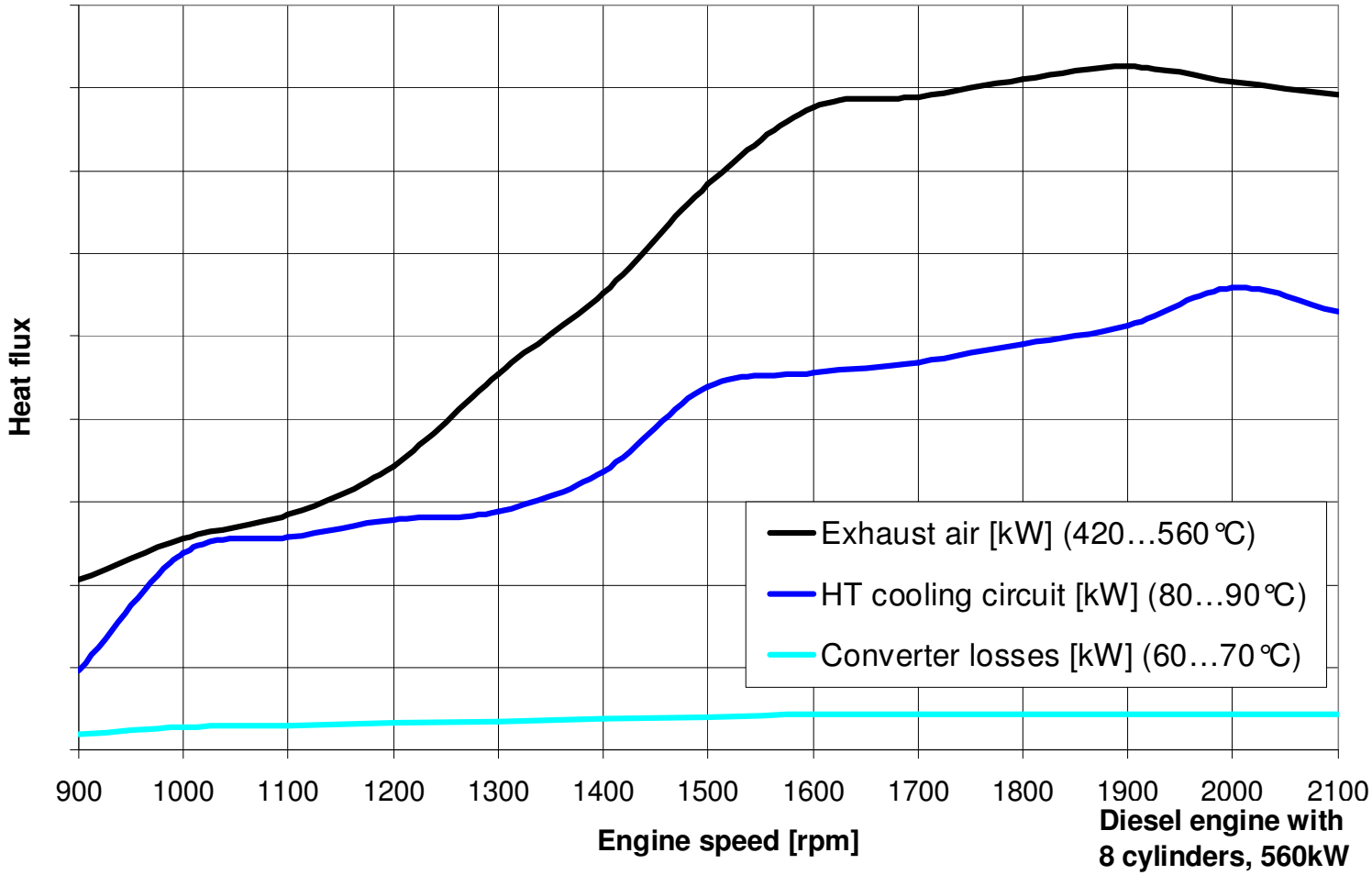


**Note:** Amount of usable waste heat from exhaust air is limited due to the back pressure of the diesel engine.

Railenergy

# Technology 1: Absorption refrigeration machine

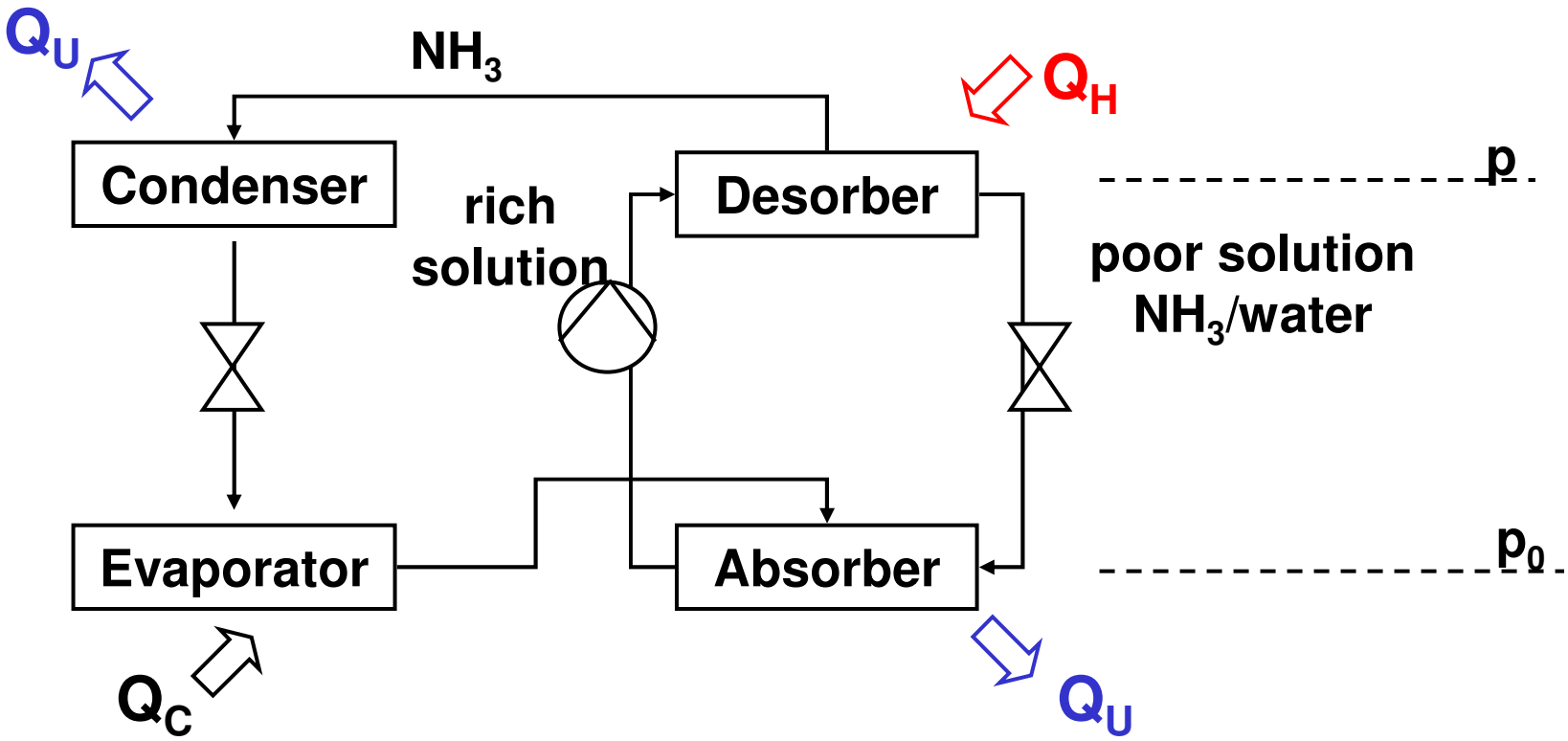


**Physics: mixing of two or more components changes at different temperature**

**high temperature ----> desorption**

**low temperature -----> absorption**

Railenergy

# Technology 2: Clausius-Rankine Process

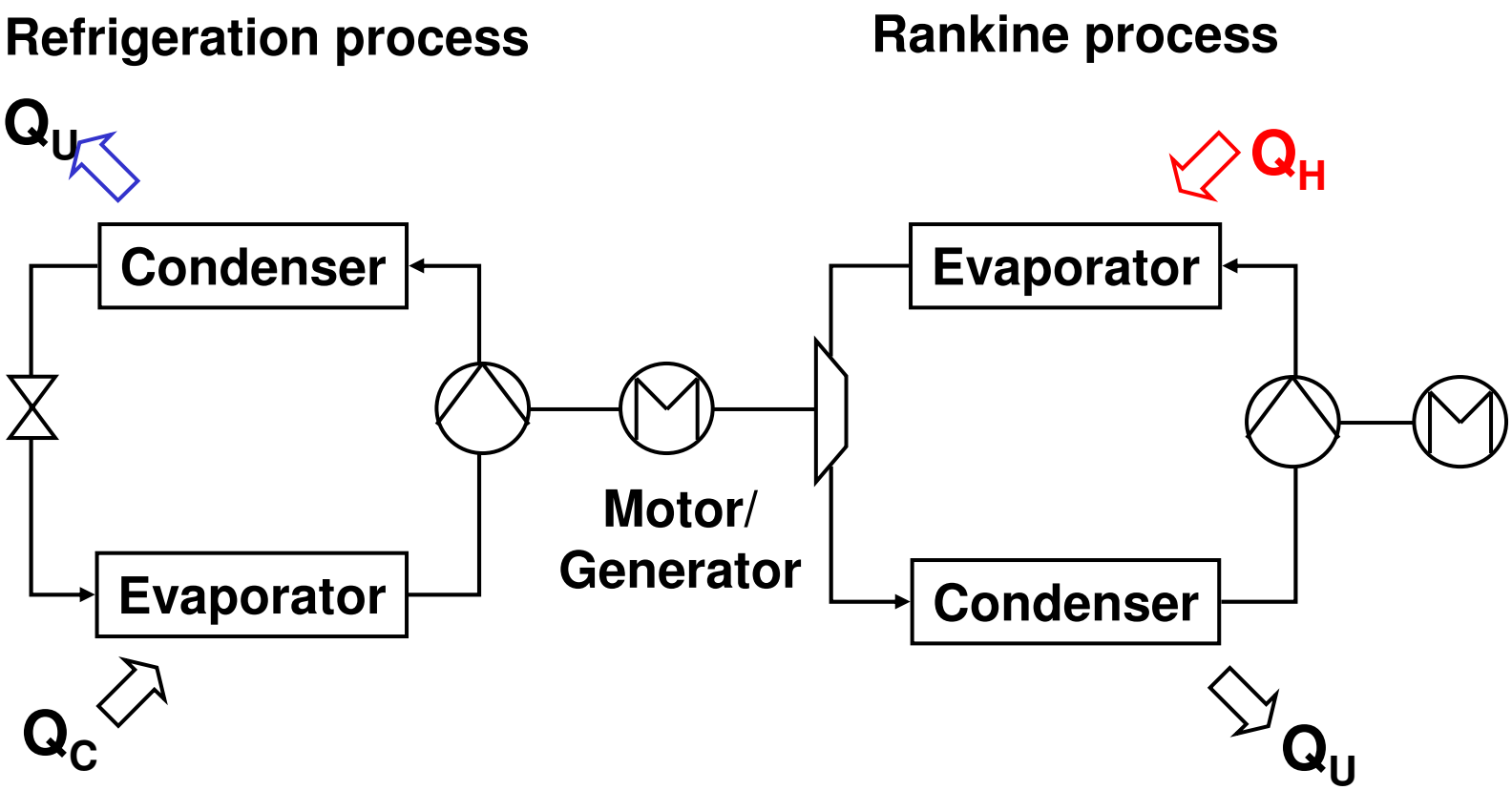


**Physics: with the Rankine process you get electrical power, this power is used to push the compressor, remained power can be saved in the battery**

Railenergy

# Combination of heat source and waste heat technology - heating

| | Waste heat from the exhaust air | Waste heat from the cooling circuit (HT) | Waste heat from cooling circuit of the traction converter |
|---|---|---|---|
| Temperature level | 420°C…560°C | 80°C…90°C | 60°C…70°C |
| Amount of available waste heat | 102kW…413kW | 48kW…280kW | 10kW…22kW |
| **heating** | possible, but high integration effort | easy to implement, already in use (Itino, Voyager, Itino etc.) | possible, to be combined with other heat sources |
| technical feasibility | waste heat sufficient for heating | waste heat sufficient for heating | waste heat not sufficient for heating |

Railenergy

# Combination of heat source and waste heat technology – absorption refrigerator

| | Waste heat from the exhaust air | Waste heat from the cooling circuit (HT) | Waste heat from cooling circuit of the traction converter |
|---|---|---|---|
| Temperature level | 420°C…560°C | 80°C…90°C | 60°C…70°C |
| Amount of available waste heat | 102kW…413kW | 48kW…280kW | 10kW…22kW |
| **cooling**<br>1.Absorption refrigeration machine<br>η app. 25-35% | high potential due to availability of a high temperatures of exhaust air in combination with a high heat flux | good potential for waste heat usage for cooling | waste heat not sufficient for absorption refrigeration machine |
| technical feasibility | usage of waste heat limited by back pressure of the exhaust air system (muffler) | setup of the cooling circuit has to be modified to ensure a coolant temperature above 80°C (minimum temp. for diesel engine) | limited potential due to the low amount of available waste heat |

Railenergy

# Combination of heat source and waste heat technology – Clausius-Rankine process

| | Waste heat from the exhaust air | Waste heat from the cooling circuit (HT) | Waste heat from cooling circuit of the traction converter |
|---|---|---|---|
| Temperature level | 420°C…560°C | 80°C…90°C | 60°C…70°C |
| Amount of available waste heat | 102kW…413kW | 48kW…280kW | 10kW…22kW |
| cooling<br>2. Clausius-Rankine process<br>η app. 5-15% | high potential due to availability of a high temperature of exhaust air in combination with a high heat flux | low potential because of the temperature of the coolant water | low potential because of the temperature of the coolant water |
| technical feasibility | usage of waste heat limited by back pressure of the exhaust air system (muffler) | not feasible steam process, higher temperature of the heat source needed | not feasible steam process, higher temperature of the heat source needed |

Railenergy

# Evaluation matrix of the waste heat technologies

| Potential for waste heat usage for | Waste heat from the exhaust air | Waste heat from the cooling circuit (HT) | Waste heat from the converter |
|---|---|---|---|
| heating | ++ | +++ | |
| cooling<br>1. Absorption refrigeration machine | +++ | ++ | |
| cooling<br>2. Clausius-Rankine process | ++ | | |

# Comparison of the refrigeration technologies

**Conventional compression refrigeration cycles**

- + **high operation cost (high COP, but driven by mechanical energy)**
- + **high noise emission**
- + **compact size possible**
- + **refrigerant is not unhealthy**

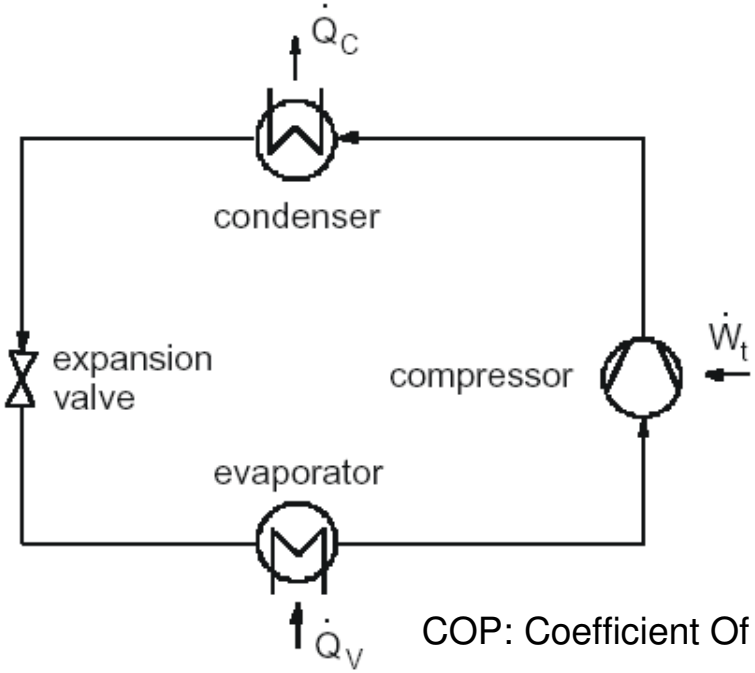


**Absorption refrigeration with conventional heat exchangers**

- + **low operation cost (low COP, but mechanical energy is substituted by (waste) heat)**
- + **low noise emission**
- + **compact size by using membrane contactors**
- – **toxic refrigerant (ammonia-water mix)**

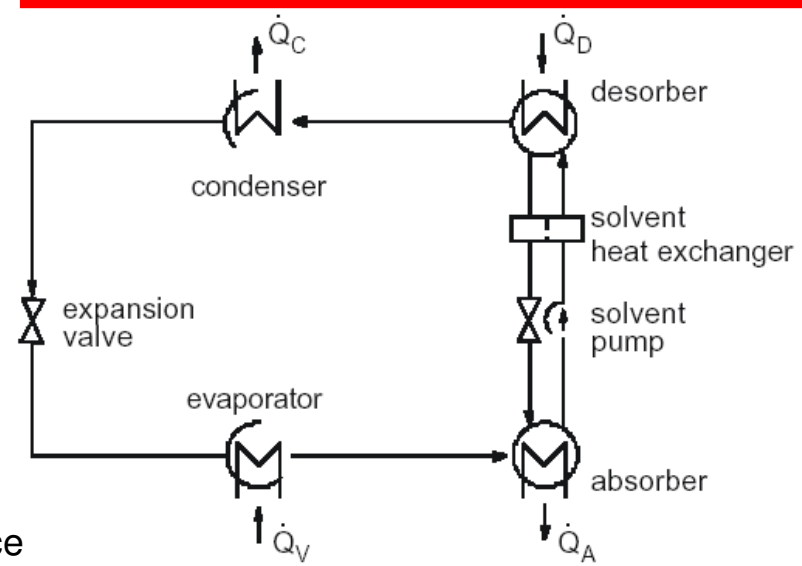


COP: Coefficient Of Performance

Railenergy

# Motivation for innovative absorbers

**Absorption refrigeration – industrial approach**

- **currently used shell and tube absorbers are large, expensive and very sensitive to the installation position**
- **impossible to employ them in mobile applications like trucks, cars and trains**

**Absorption refrigeration with membrane contactors**

- **mechanical power can be substituted by (waste) heat, which has to be supplied to the desorber**
- **development of a solution which is suitable in mobile applications**

Railenergy

# Industrial solution

LiBr based Absorption refrigeration machine

- **Low operational costs**
- **Low noise level**
- **Not suitable for mobile applications**
  - **weight, space due to the conventional absorbers**
  - **not robust for vibrations**

| | |
|---|---|
| Heating capacity | 15kW |
| Cooling capacity | 36kW |
| Installation space | **$2m^3$ + AHU** |
| Weight | 650kg + AHU |
| Price | 14.900 € |

AHU: Air Handling Unit

# Innovative alternatives for absorbers

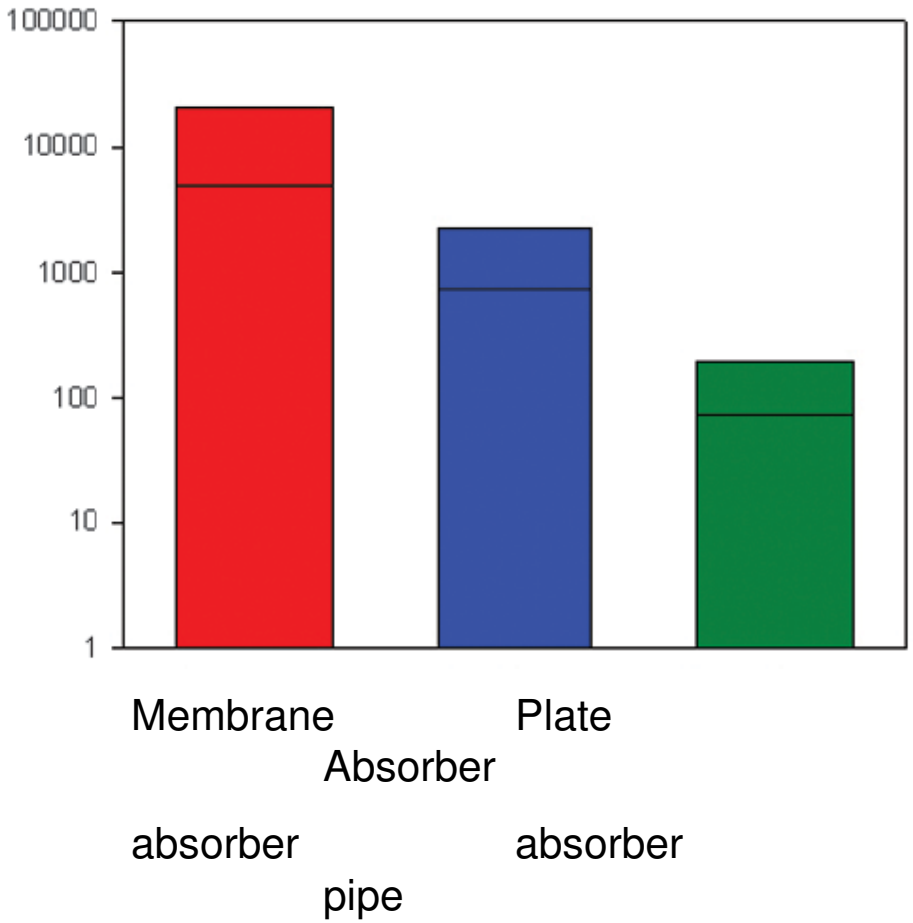


Installation space of absorbers for a cooling capacity of 35kW:

**Conventional absorber: 0.35m³**

**Membrane absorber: 0.05m³**

# Membrane absorption refrigeration

- **Absorber (and optionally desorber) in absorption refrigeration are built as membrane contactors**
- **Benefits from absorption refrigeration technology without shortcomings due to the conventional absorber/desorber design**
- **Compact due to high surface area per volume and forced convection (installation space can be reduced down to 20%)**
- **Robust, suited for mobile applications**
- **Lower investment costs than conventional absorbers**
- **No risk of corrosion**

Makatec Membrane absorber

Railenergy

# Assessment of the technologies

| DEMONSTRATION SCENES | energy saving | DS 1 | | DS 2 | | | | DS 3 | | | | |
|---|---|---|---|---|---|---|---|---|---|---|---|---|
| USE CASES | | 1,1 | 1,2 | 2.1 A | | 2.1 B | 2,2 | 3,1 | 3,2 | 3,3 | 3,4 | 3,5 |
| TECHNOLOGIES | | AC 50 Hz | AC 16,7 Hz | Pass. AC (loco) | Pass. AC (EMU) | Freight AC (night) | Pass. Freight DC (loco) | Diesel (DMU) | Electric (EMU) AC | Electric (EMU) DC | Pass. DC (EMU) | Pass. Diesel (DMU) |
| Eco-driving (WP 2.3) | 5% | 1 | | 1 | 1 | | | 1 | | | 1 | |
| DC Substation (WP 3.2.1) | 5%-10% | | | | | | 3 | | | 1 | | |
| Real time management (WP 3.2.2) | 2%-6% | | | 2 | 2 | 3 | 2 | | 2 | 2 | 2 | |
| 2x 1.5 kV DC Traction System (WP 3.2.3) | 1%-2% | | | | | | 2 | | | 1 | 2 | |
| Asymmetrical system (WP 3.3) | 1% | 1 | 3 | 3 | 3 | 3 | | | 1 | | | |
| Parallel substation (WP 3.3) | 1%-2% | 1 | 1 | 3 | 3 | 3 | | | 3 | | | |
| Reduced line impedances (WP 3.3) | 0.5%-1% | 1 | 1 | 3 | 3 | | 1 | | 1 | 3 | 1 | |
| Increased line voltage (4kV) (WP 3.3) | 1%-2% | | | | | | 1 | | | 2 | 2 | |
| Trackside Energy Storage Unit | 5% | | | | | | | | | 2 | 2 | |
| On-board energy storage technology (WP 4.1) | 20% | 3 | 3 | | 3 | | | 1 | 3 | 3 | 3 | 2 |
| Use of Waste Heat (WP 4.2) | 2%-5% | | | | | | | 1 | | | | 1 |
| Superconducting transformers and inductances for railway traction (WP 5.2) | 3%-4% | 1 | 1 | | | 2 | | | | | | |
| Medium frequency energy distribution (WP 5.3) | 2%-3% | 1 | 1 | | | | | | 2 | | | |
| Innovative hybrid diesel electric propulsion (WP 5.4) | 2%-4% | | | | | | | 1 | | | | 1 |
| New PWM technique to optimize converter commutation losses (WP 6.2) | 0.5%-1% | | | 3 | 2 | 3 | 3 | 3 | 3 | 2 | 3 | 3 |
| Input voltage management (WP 6.2) | 0.5%-1% | | | | | | 1 | | | 3 | 2 | |
| New control tech. to use braking energy (WP 6.2) | 1%-2% | | | | | | 2 | | | 1 | | |
| New control tech. to reduce converter energy consumption during vehicle coasting (WP 6.2) | 0.5% | | | | | 1 | | | 1 | | | |
| Active filtering tech. to reduce Input passive filter (reactors) losses (WP 6.2) | 0.5%-1% | 2 | | | | | | | | | 1 | |
| Optimization of Converter losses vs. ambient temperature (WP 6.2) | 1%-2% | 2 | 3 | 1 | 1 | 1 | 3 | 3 | 3 | 3 | 3 | 3 |
| Architectural solutions to integrate traction and auxiliary converters (WP 6.3) | 0.5%-1% | 3 | 3 | 3 | 2 | 3 | 3 | 3 | 3 | 3 | 1 | 3 |
| Architectural solutions to save energy during normal operation (WP 6.3) | 0.5%-1% | 3 | 3 | 3 | 2 | 3 | 3 | 3 | 3 | 3 | 2 | 3 |
| Reuse of converters energy loss (WP 6.4) | 1%-1.5% | 3 | 3 | 3 | 2 | | 1 | 3 | | | 3 | |
| MT Loads management (WP 6.4) | 0.5%-1% | 3 | 3 | 3 | 2 | 3 | 3 | 3 | 3 | 3 | 3 | 3 |
| Use of a centralized cooling system for traction and auxiliary converter (WP 6.4) | 0,10% | 3 | 3 | 3 | 2 | | 3 | | | | | |

# Description of the train types

| | UC 3.1 | UC 3.5 |
|---|---|---|
| country | France | UK |
| service type | Regional | Intercity |
| track | Paimpol to Carhaix via Guingamp | London to Sheffield |
| train type | DB AG class 644 (Talent classic DEMU) | Midland Mainline class 222 |
| mass empty | 84.3t | 193.3 t |
| mass normal load | 101t | 16 t |
| axle arrangement | Bo-2--2-Bo | 1A'A1'+1A'A1'+1A'A1'+1A'A1' |
| max axle load | 15.3 t | 16 t |
| no. of converters | 2 | 4 |
| no. of traction motors | 4 | 8 |
| no. of powerpacks | 2 | 4 |
| diesel engine power | 505 kW | 560 kW |
| engine speed | 2100 rpm | 1800 rpm |
| max speed | 120 kph | 200 kph |
| remarks | **no DEMU available on this track** | |

# Next steps

- Simulation of the available waste heat for different station distances (2km, 5km, 10 km) for DEMU
- Simulation work in WP2.5 (UC 3.1 & UC 3.5)
  - Definition of the interfaces
  - Development of modules of the subsystems
- Concept formulation for a prototype including functional diagram and detailed specification for given train types in UC3.1 and 3.5
- Assessment of the saving potentials
- Status of alternative refrigerants for absorption refrigeration machines

Railenergy

# Thanks for your attention!

Bombardier Transportation GmbH
Christian Lauszat
PGR/TSSA
Am Rathenaupark
D 16761 Hennigsdorf
Christian.lauszat@de.transport.bombardier.com