Railenergy

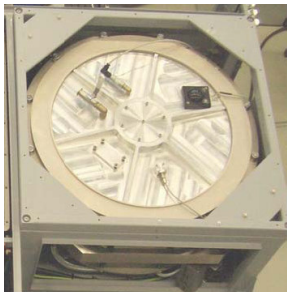

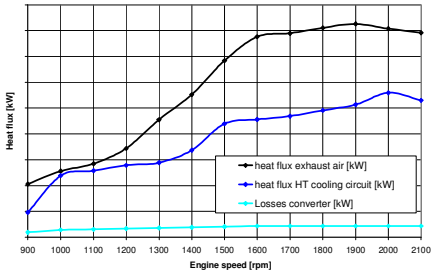

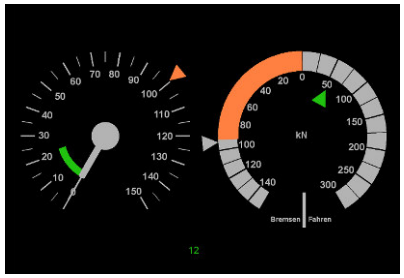

Welcome to the 4th Railenergy Workshop

"Energy Efficient Components"
March 18th, 2009, Berlin

Helene Koepf / UNIFE

Christian Lauszat / Bombardier Transportation

Railenergy

Facts, Figures, Objective

- Integrated Project co-funded by the EU under the 6th Framework Programme
- 27 partners across the EU
- Project start: 01 September 2006
- Duration: 4 years
- Budget: €14.7M (€8M EC grant)

The overall objective of Railenergy is to cut the energy consumption in the railway system thus contributing to the reduction of life cycle costs of railway operation and of CO2 emission.
The project target is to achieve a 6% reduction of the specific energy consumption of the rail system by 2020.

Railenergy

Partnership

unife
THE EUROPEAN RAIL INDUSTRY

uic

D'APPOLONIA
engineering consulting company

IZT

SIEMENS

ALSTOM

ANSALDOBREDA

BOMBARDIER

BANVERKET

RFI

TRENITALIA

EUROLUM

Faiveley S.A.

SAFT

TRANSTECHNIK

Rail Cargo Austria
Ein Unternehmen der ÖBB

ENOTRAC

emkamatik
Engineering – Modeling – Calculation – Real Time Simulation for Railways and Electrical Systems

transrail

SCIROIDEA

TRANSPORT SYSTEMS AND INFRASTRUCTURES
GROUP

nitel
Consorzio Nazionale
Interuniversitario
per i Trasporti
e la Logistica

CORYS
Training
& Engineering
Support
Systems

tfk

VUZ

KTH
VETENSKAP
OCH KONST

FAV

Railenergy

Railenergy will give solutions on

- **Ecology & Sustainable transport**
  - **Reduce CO_2 emissions**
  - **Reduce the use of fossil fuel and electricity leading to a reduction of the use of natural resources**
- **Economy :**
  - **Economic assessment / validation of technologies**
  - **Reduce energy cost for operators**
- **Standards (TecRec):**
  - **Definition of appropriate standardized driving cycles (service profiles) and energy consumption methodology allows comparison of the energy performances of trains.**
- **Competition:**
  - **Improvements in the energy and CO_2 balance for railways will reinforce the interest of the rail towards other modes.**

Railenergy

Project Structure

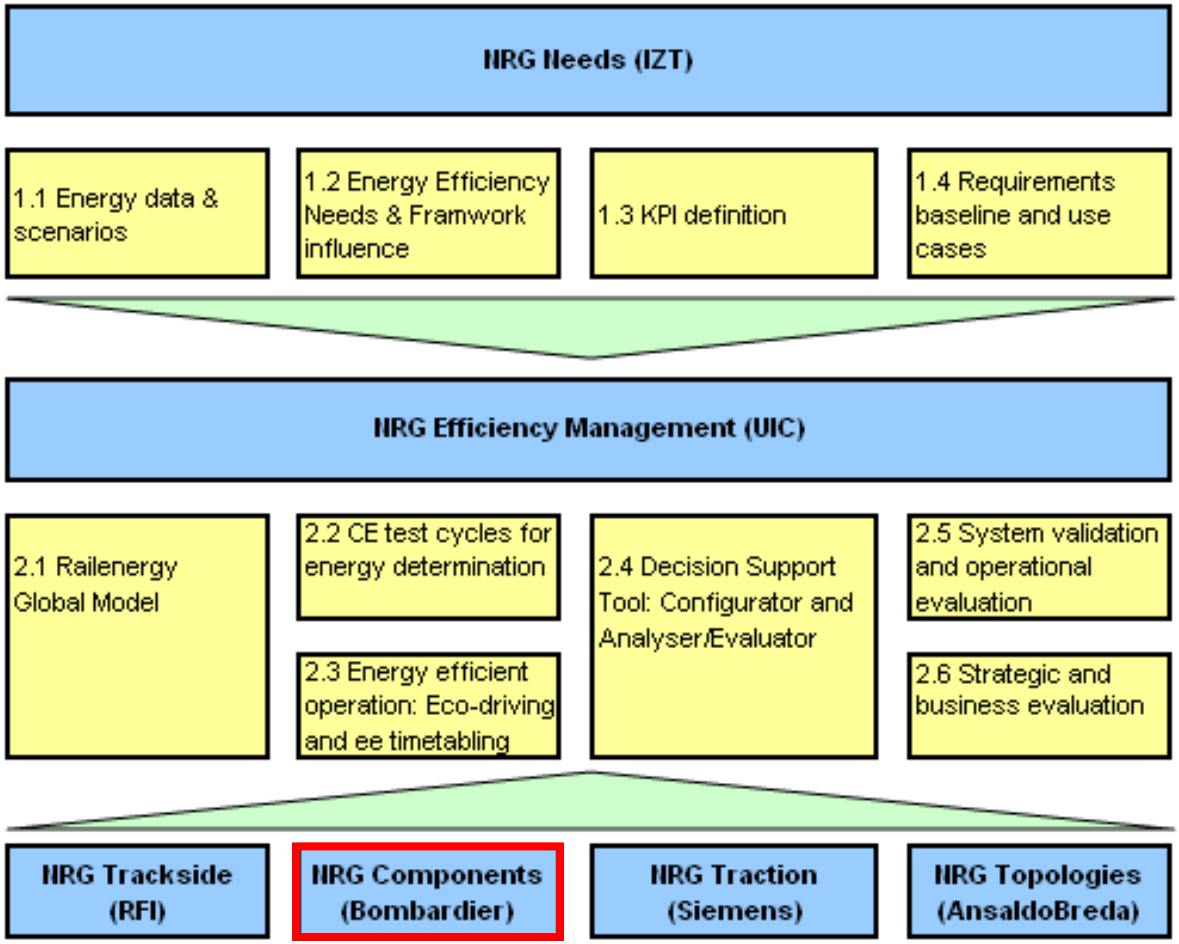

SP4 Components

- onboard energy storage
- waste heat recycling
- human machine interface (HMI)

This workshop is a part of a series of Railenergy workshops

- ✓ 1st Workshop "EE Management"
  June 18th, 2008
  Paris

- ✓ 2nd Workshop "EE Operation"
  October 8th, 2008
  Rome/ Roma

- ✓ 3rd Workshop "EE in Electric Traction Infrastructure"
  January 28th, 2009
  Florence/ Firenze

- 4th Workshop "EE Components"
  March 18th 2009
  Berlin

Next workshops

- Workshop “EE Traction”, Nuremberg, 06.05.09
- Workshop “EE Topologies”, Naples, 09.07.09
- Workshop “DST and the Global Model”, Fall 09
- Workshop “EE Infrastructure”, Fall 09
- **Conference “Energy Efficiency Days 2009”**
  Tours, 23.-26.09.09 (23.09 Railenergy Conference)
- Final Conference 2010, Brussels
- Virtual Training Platform, Fall 09

Railenergy

Sub-Project 4 Structure

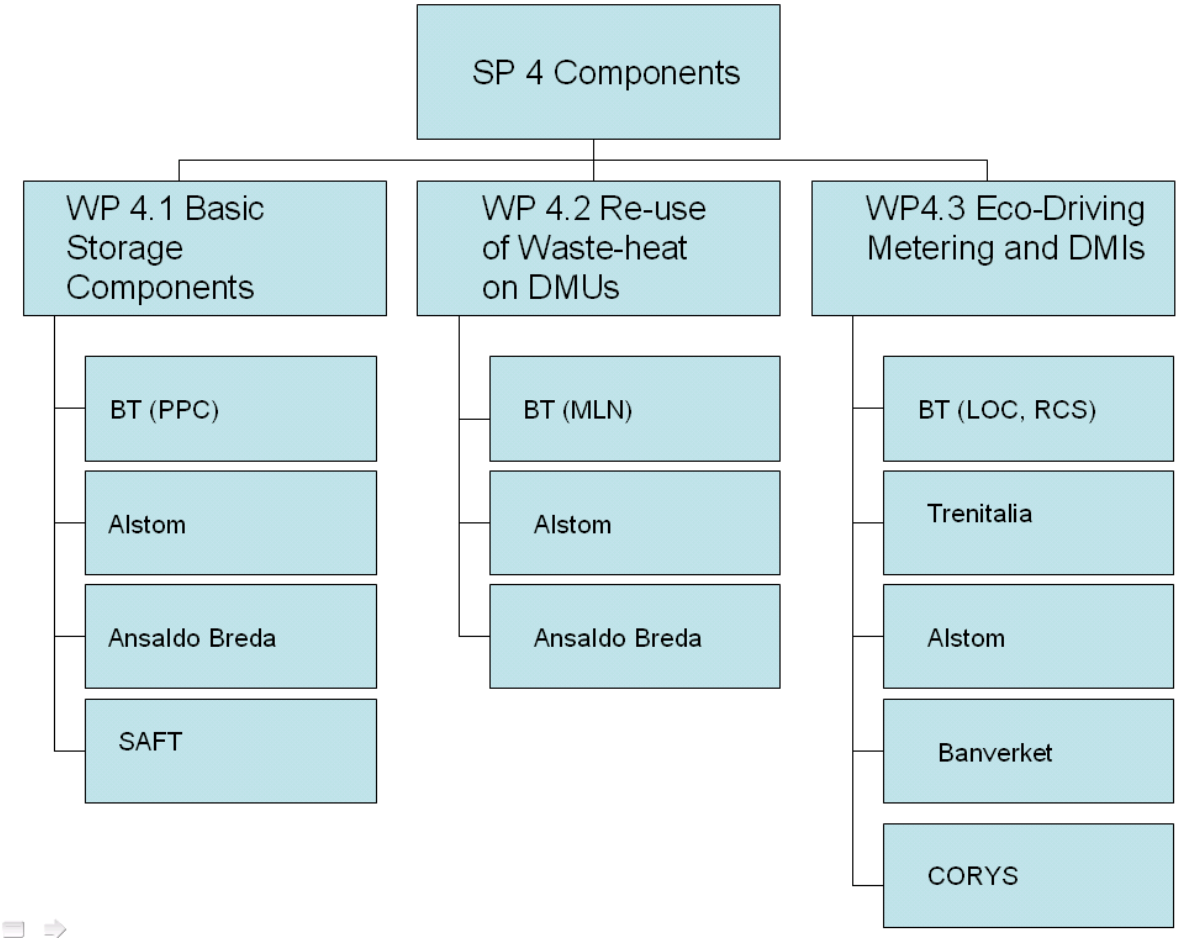

Railenergy

General Objectives

- *Evaluation of the options for railway vehicles equipped with diesel-electric drives*
- *Evaluation of the potential contribution be made by*
  - *improved energy storage (WP4.1)*
  - *waste heat recycling (WP4.2)*
  - *driving style management systems (WP4.3)*

to reduce the energy consumption.

Railenergy

Identification of the Target

Domain	Operation	Trackside	Components	Traction	Topologies
efficiency potentials on a subsystem level	energy efficient driving 5-20%, energy efficient time tabling 5-10%	recuperation DC networks 10-20% loss reduction (incl. contact lines) 2-5%	on-board energy storage 5-30% use of waste heat 5-20%	supercond. transf. 40-60% medium freq. transf. 35-55% perm. magnet mot./gen. 4-10%	traction control 10-25% aux power supply 10-30% aux cooling system 5-15%
global contribution	2%	4%	5%	5%	2%
		Deployment in European railways: 25%			
system-wide impact	2%	1%	1,25%	1,25%	0,5%
	Overall target: 6%				

Railenergy

Assessment of the technologies

DEMONSTRATION SCENES	energy saving	DS 1		DS 2				DS 3				
USE CASES		1,1	1,2	2.1 A		2.1 B	2,2	3,1	3,2	3,3	3,4	3,5
TECHNOLOGIES		AC 50 Hz	AC 16,7 Hz	Pass. AC (loco)	Pass. AC (EMU)	Freight AC (night)	Pass. Freight DC (loco)	Diesel (DMU)	Electric (EMU) AC	Electric (EMU) DC	Pass. DC (EMU)	Pass. Diesel (DMU)
Eco-driving (WP 2.3)	5%	1		1	1			1			1	
DC Substation (WP 3.2.1)	5%-10%						3			1		
Real time management (WP 3.2.2)	2%-6%			2	2	3	2		2	2	2	
2x 1.5 kV DC Traction System (WP 3.2.3)	1%-2%						2			1	2	
Asymmetrical system (WP 3.3)	1%	1	3	3	3	3			1			
Parallel substation (WP 3.3)	1%-2%	1	1	3	3	3			3			
Reduced line impedances (WP 3.3)	0.5%-1%	1	1	3	3		1		1	3	1	
Increased line voltage (4kV) (WP 3.3)	1%-2%						1			2	2	
Trackside Energy Storage Unit	5%									2	2	
On-board energy storage technology (WP 4.1)	20%	3	3		3			1	3	3	3	2
Use of Waste Heat (WP 4.2)	2%-5%							1				1
Superconducting transformers and inductances for railway traction (WP 5.2)	3%-4%	1	1			2						
Medium frequency energy distribution (WP 5.3)	2%-3%	1	1						2			
Innovative hybrid diesel electric propulsion (WP 5.4)	2%-4%							1				1
New PWM technique to optimize converter commutation losses (WP 6.2)	0.5%-1%			3	2	3	3	3	3	2	3	3
Input voltage management (WP 6.2)	0.5%-1%						1			3	2	
New control tech. to use braking energy (WP 6.2)	1%-2%						2			1		
New control tech. to reduce converter energy consumption during vehicle coasting (WP 6.2)	0.5%					1			1			
Active filtering tech. to reduce Input passive filter (reactors) losses (WP 6.2)	0.5%-1%	2									1	
Optimization of Converter losses vs. ambient temperature (WP 6.2)	1%-2%	2	3	1	1	1	3	3	3	3	3	3
Architectural solutions to integrate traction and auxiliary converters (WP 6.3)	0.5%-1%	3	3	3	2	3	3	3	3	3	1	3
Architectural solutions to save energy during normal operation (WP 6.3)	0.5%-1%	3	3	3	2	3	3	3	3	3	2	3
Reuse of converters energy loss (WP 6.4)	1%-1.5%	3	3	3	2		1	3			3	
MT Loads management (WP 6.4)	0.5%-1%	3	3	3	2	3	3	3	3	3	3	3
Use of a centralized cooling system for traction and auxiliary converter (WP 6.4)	0,10%	3	3	3	2		3					

1. KPI evaluation at system level, using commercial multi-train simulators
2. Subproject / Work package simulation (quantitative calculation, multi-train or single train run)
3. Expert quantitative/qualitative assessment (e.g. efficiency gains of components/subsystems).

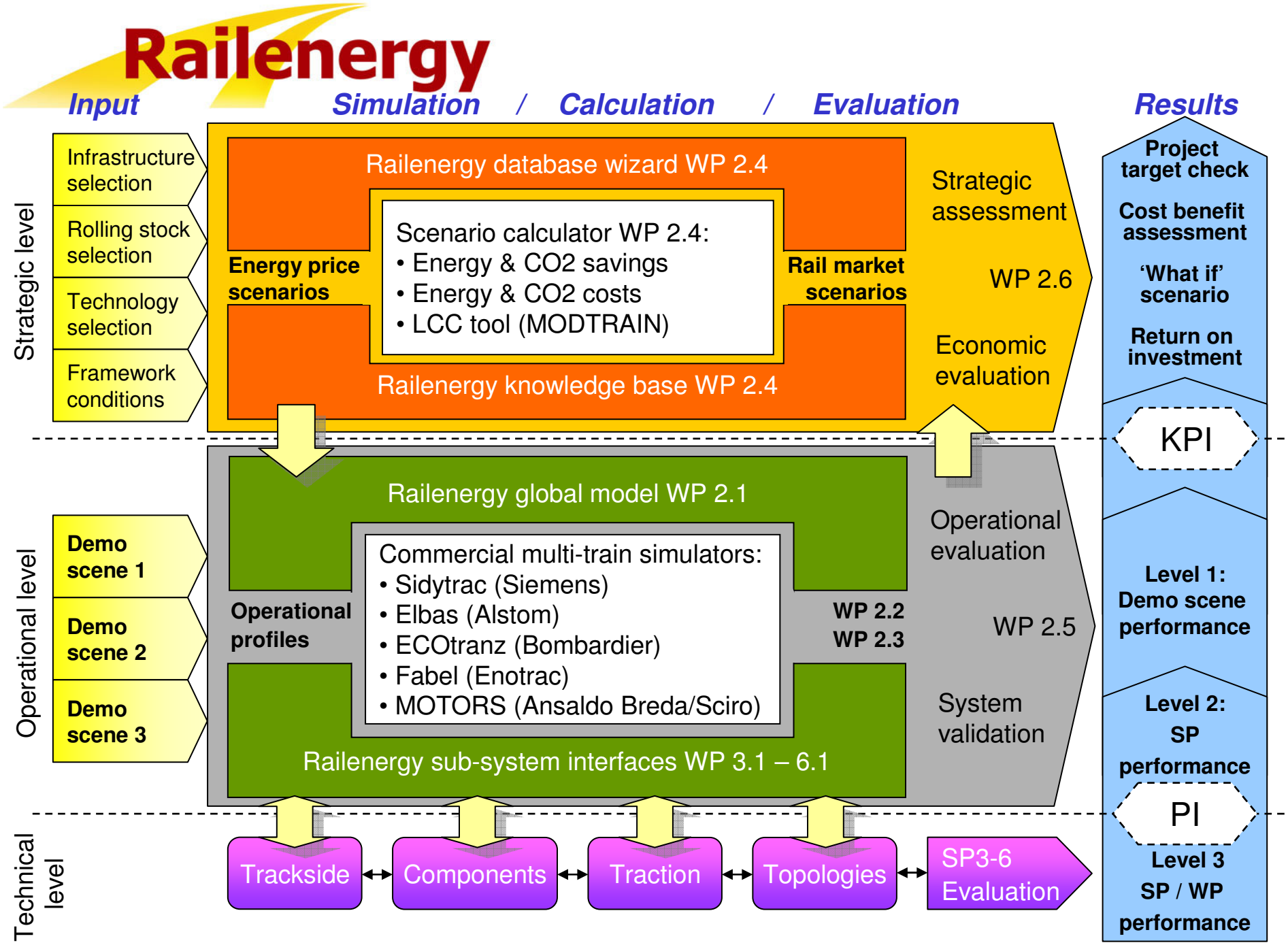
Railenergy
Input
Simulation / Calculation / Evaluation
Results
Strategic level
Infrastructure selection
Rolling stock selection
Technology selection
Framework conditions
Railenergy database wizard WP 2.4
Energy price scenarios
Scenario calculator WP 2.4:
• Energy & CO2 savings
• Energy & CO2 costs
• LCC tool (MODTRAIN)
Rail market scenarios
Railenergy knowledge base WP 2.4
Strategic assessment
WP 2.6
Economic evaluation
Project target check
Cost benefit assessment
'What if' scenario
Return on investment
KPI
Operational level
Demo scene 1
Demo scene 2
Demo scene 3
Railenergy global model WP 2.1
Operational profiles
Commercial multi-train simulators:
• Sidytrac (Siemens)
• Elbas (Alstom)
• ECOtranz (Bombardier)
• Fabel (Enotrac)
• MOTORS (Ansaldo Breda/Sciro)
WP 2.2
WP 2.3
Railenergy sub-system interfaces WP 3.1 – 6.1
Operational evaluation
WP 2.5
System validation
Level 1: Demo scene performance
Level 2: SP performance
PI
Technical level
Trackside
Components
Traction
Topologies
SP3-6 Evaluation
Level 3 SP / WP performance

Railenergy

Details about Subproject 4 and our works in today's workshop

Agenda

08h30 – 09h00	Registration
Introduction 09h00 – 09h30	Introduction & Summary of Railenergy's Subproject 4 "Components" (Christian Lauszat, BT & Helene Köpf, UNIFE)
Panel 1 – Onboard energy storage 09h30 – 10h30	Onboard energy storage - Overview on existing onboard energy storage technologies (Characteristics, selection criteria's, possible combinations) - Saving potentials in different applications (Dr. Markus Klohr, BT) Battery in traction applications (Pierre Prenleloup, Saft S.A.) Questions & Discussion
10h30 – 11h00	Coffee Break
Panel 2 – Re-Use of waste heat 11h00 – 12h30	Potentials and limitations of waste heat usage in Rolling stock (Christian Lauszat, BT) Re-Use of waste heat technology by Voith (Jürgen Berger, Voith) Questions & Discussion
12h30 – 14h00	Lunch
Panel 3 – Driver Assistant Systems 14h00 – 15h30	Drivers Assistant System - HMI - Introduction into giving driving style recommendations to engine drivers. Integration of DAS into vehicle shown on TRAXX locomotives (Dr. Marcus Lindemann) Questions & Discussion
Joint working groups 15h30 – 16h30	3 groups to discuss about - expectations on future development in energy efficient components Presentation of the results
16h30	Conclusions and wrap up